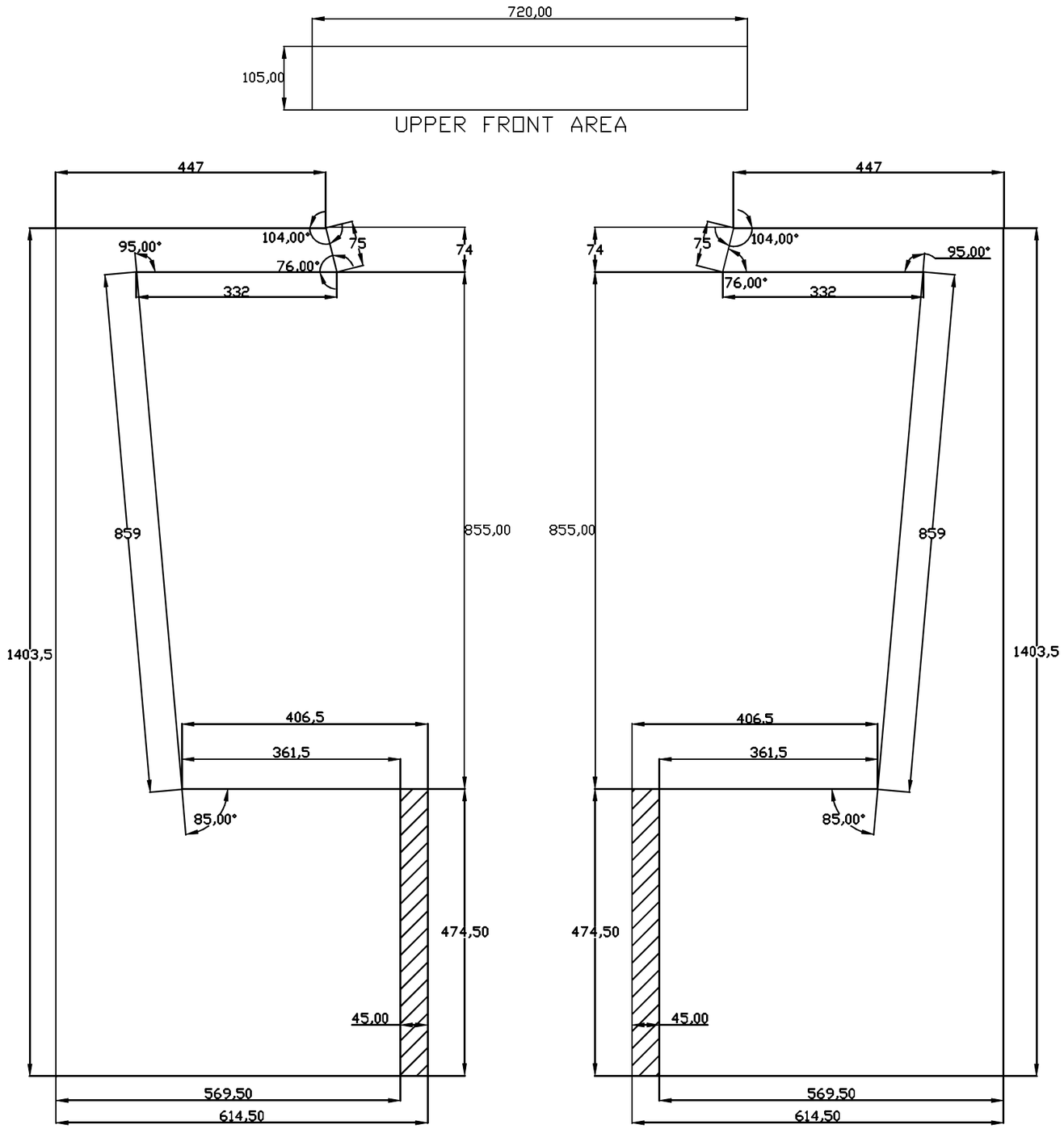

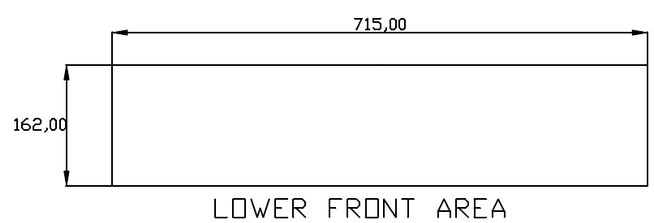

TEFCOLD	Date: 191221
Model: ODC90	Rev. no.: 01
Branding area	Rev. by: rfj
Drawing no.:	